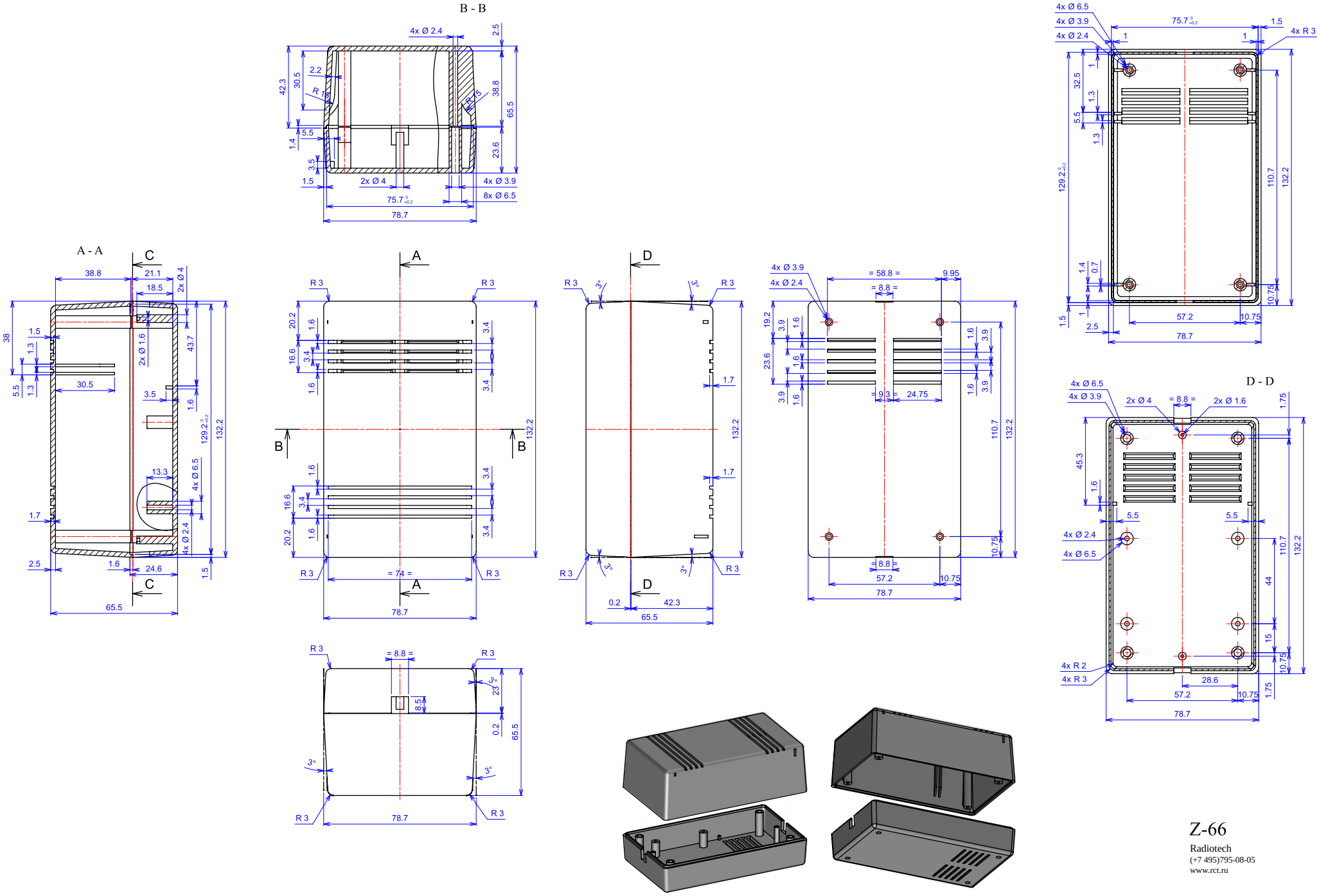
A - A
B - B
C - C
D - D
4x Ø 2.4
2x Ø 4
4x Ø 3.9
8x Ø 6.5
75.7
78.7
4x Ø 6.5
4x Ø 3.9
4x Ø 2.4
4x R 3
57.2
10.75
2.5
2x Ø 1.6
4x Ø 6.5
4x Ø 2.4
= 58.8 =
= 8.8 =
9.95
24.75
= 74 =
42.3
65.5
4x R 2
4x R 3
28.6
Z-66
Radiotech
(+7 495)795-08-05
www.rct.ru