D1RFRD006

REVISION RECORD				
REV	ECN	DESCRIPTION	DRFT	DATE
1	10-0240	通过UL认证,变更参数	Jinhai.Lan	07/29/10"

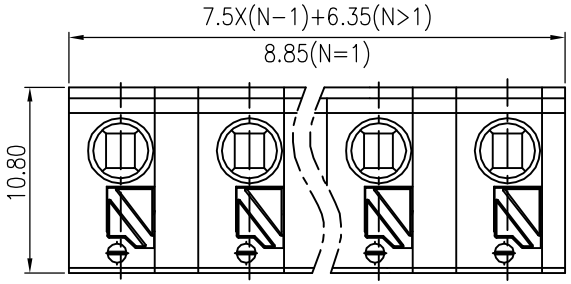

Notes:

1. Pitch:7.5mm ,Poles:XXP
2. Rated voltage/current:UL 300V/8A
   IEC 250V/17.5A
3. Operation temperatures:-40℃～+105℃
4. Withstanding Voltage:AC2000V/1Min
5. Insulation Resistance:5000MΩ/DC1000V
6. Wire Range:28～16AWG,1.5mm² ⚠
7. Undimensioned Tolerances:

Pitch range in mm			Naminal dimension range in mm					—
to 6	over 6 to 10	over 10 to 24	to 30	over 30 to 60	over 60 to 100	over 100 to 150	over 150	⌒ ▱
±0.10	±0.15	±0.25	±0.2	±0.3	±0.5	±0.7	±1.0	0.05/10

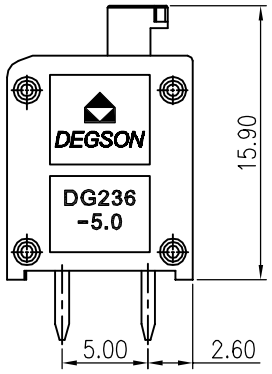

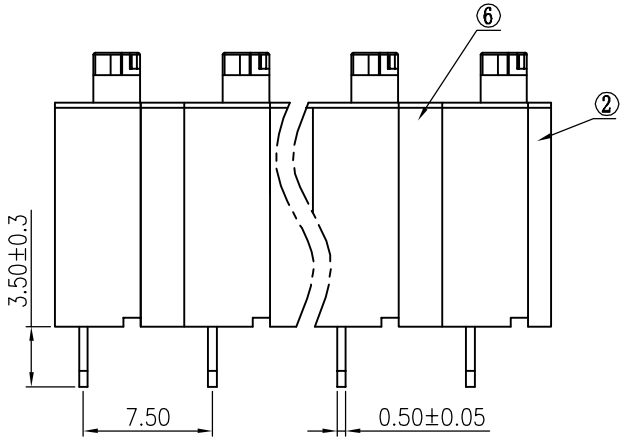

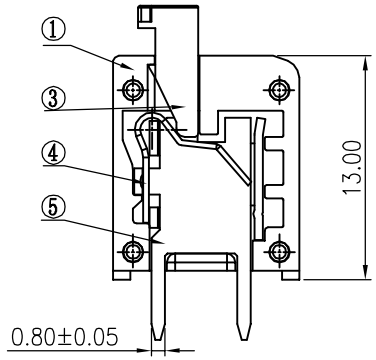

W/O COVER VIEW

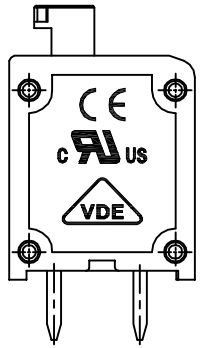

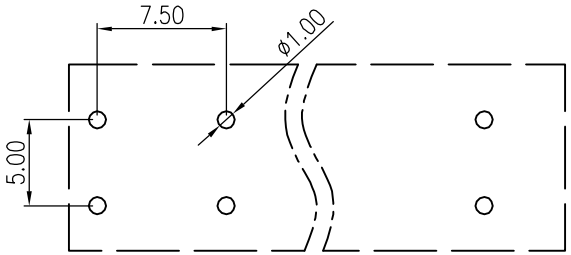

TOP VIEW-LAYOUT

ITEM	NAME OF PART	NO. OF PART	Q"TY	MATERIAL	NOTES
6	DG236-7.5 Calpboard	3020H0Y01A(H)	XX>1 XX-1 / XX-1 1	PA66	UL94V-0
5	DG236-5.0 Pin header	3020B00010(H)	XX	Pure copper	SnCe
4	DG236-5.0 Spring	X000000590(H)	XX	Stainless Steel	
3	DG236-5.0 Button	3020D0Y01A(H)	XX	PA66	UL94V-0
2	DG236-5.0 Cover	3020C0Y01A(H)	1	PA66	UL94V-0
1	DG236-5.0 Housing	3020A0Y01A(H)	XX	PA66	UL94V-0

DETACHED LISTS

MM (INCH)

TOLERANCES EXCEPT AS NOTED

MM	
.0 ±	±
.00 ±	±
.000 ±	±

ANGLES ± 1°

THIRD ANGLE PROJECTION

DFTD HXG	DATE 03/13/09"	
CHKD	DATE	
MFD	DATE	
APPVL	DATE	
MATERIAL :		
G.E :		
FINISH:		
SCALE : 1:1		

DEGSON® 宁波高正电子有限公司 DEGSON ELECTRONICS CO., LTD

NAME DG236-7.5-XXP-1Y-00A(H)

DRAWING NO. DG236-7.5-E01 /PART NO.

SIZE A3 REV T1 07/29/10"

DO NOT SCALE DRAWING

SHEET 1 OF 1